PoWer MIG Series

GeKaMac®

PoWer MIG 3500 LST

Users Manual

Please Read and Understand This Manual
Before Operating The Welding Machine

www.gedikkaynak.com.tr

This machine is for internal use only.

It complies with the WEEE Directive.

This machine has been designed in accordance with the EN 60974-1 and EN 60974-10 standards.

The machine is safe when installation, operation, and maintenance are performed in accordance with the user manual and regulations. The operator and machine owner are responsible for adhering to safety rules.

Gedik Kaynak San. Ve Tic. A.Ş. assumes no responsibility for safety or CE compliance if any modifications are made to the machine or if safety rules are not followed.

This Class A equipment is not suitable for use in homes and similar residential areas where the power supply is provided by the low-voltage public electricity network.

This machine is not household waste and cannot be disposed of in the trash.

When the machine reaches the end of its service life or becomes obsolete, it must be disposed of in accordance with regulations.

COMPLIES WITH THE WEEE DIRECTIVE.

Eco Design Statement

This machine has been designed and manufactured in accordance with the requirements of the 2009/125/EC Eco Design Directive concerning the environmentally friendly design of energy-related products.

Accordingly, machines with an idle mode are as follows.

	Idle Mode
MMA	**X**
MIG	√
TIG	√
Plazma	√
SAW	**Out of Scope**

Efficiency measurements should be conducted only on the power unit. The water cooling system should be disabled. For more information on measurements and machine settings, Gedik Kaynak Sanayi ve Ticaret A.Ş. should be consulted.

AT UYGUNLUK BEYANI

EU DECLARATION OF CONFORMITY

Bu uygunluk beyanı yalnızca imalatçının sorumluluğu altında düzenlenir.

This declaration of conformity is issued under the sole responsibility of the manufacturer.

İstanbul, Turkey, 08.03.2024

İmalatçı / Manufacturer

GEDİK KAYNAK SANAYİ ve TİCARET A.Ş.

Ankara Cad. No.306 Seyhli Pendik ISTANBUL TURKIYE

Ürün / Product	ARC WELDING MACHINE
Marka-Model / Brand- Model	POWER MIG 3500 LST

Yukarıda tanımlanan beyanın nesnesi ilgili uyumlaştırılmış AB mevzuatı ile uyumludur.

The object of the declaration described above, is in conformity with the relevant union harmonisation legislation.

Direktifler / Directives 2014/30/EU & 2014/35/EU

Uyumlaştırılmış standartlar ve uygunluğun deklare edilmesiyle ilişkili diğer referanslar.

References to the relevant harmonised standarts used and references to the other technical specifications in relation to which conformity is declared.

EN IEC 60974-1:2018+A1:2019
EN 60974-10:2014+A1:2015

Bu ekipman, talimatlara uygun kurulduğunda, bakımı yapıldığında ve kullanıldığında belirtilen standartlara uygundur. Makine üzerinde bir değişiklik yapıldığında veya yanlış kullanımda deklarasyon geçersiz olur.

The equipment is in compliance with pertinent legislation when installed, utilized, and maintained in accordance with the enclosed instructions. This declaration will be invalid under any modification or improper use.

İmalatçı Adına imzalayan / Signed for and on behalf of:

Hatice Özel, Equipment Business Unit Director

Dear Customer

This instruction manual will help you get to know your new machine. Read the manual carefully and you will soon be familiar with all the many great features of your new product. Meanwhile, please remember well safety rules and operate as instruction.

If you treat your product carefully, this definitely helps to prolong its enduring quality and reliability things which are both essential prerequisites for getting outstanding results.

Production specification may change without advance notice.

The model you purchase is for:

- ☐ PoWer MIG 3500 LST

Please find corresponding models from the "Contents".

Important:

Please take special note of safety rules and operate as instruction in case of damage and serious injury.

Safety Rules

“Danger” indicates an imminently hazardous situation which, if not avoided, will result in death or serious injury.

“Warning!” indicates a possible hazardous situation which, if not avoided, could result in death or serious injury. The possible hazards are explained in the text.

“Caution” indicates a possible hazardous situation which, if not avoided, may result in slight or moderate injury.

“Note!” indicates a situation which implies a risk of impaired welding result and damage to the equipment.

“Important!” indicates practical tips and other useful special-message. It is no signal word for a harmful or dangerous situation.

Utilisation for intended purpose only

- The machine may only be used for jobs as defined by the “Intended purpose”.
- Utilisation for any other purpose, or in any other manner, shall be deemed to be “not in accordance with the intended purpose”. The manufacturer shall not be liable for any damage resulting from such improper use.

Safety signs

- All the safety instructions and danger warnings on the machine must be kept in legible condition, not removed, not be covered, pasted or painted cover.

Safety inspection

- The owner/operator is obliged to perform safety inspection at regular intervals.
- The manufacturer also recommends every 3-6 months for regular maintenance of power sources.

Electric shock can kill

- Touching live electrical parts can cause fatal shocks or severe burns. The electrode and work circuit is electrically live whenever the output is on. The input power circuit and machine internal circuits are also live when power is on. In MIG/MAG welding, the wire, drive rollers, wire feed housing and all metal parts touching the welding wire are electrically live. Incorrectly installed or improperly grounded equipment is a hazard.
- Do not touch live electrical parts of the welding circuit, electrodes and wires with your bare skin or wet clothing.
- The operator must wear dry hole-free insulating welding gloves and body protection while performs the welding.
- Insulate yourself from work and ground using dry insulating protection which is large enough to prevent you full area of physical contact with the work or ground.
- Connect the primary input cable according to rules. Disconnect input power or stop machine before installing or maintenance.
- If welding must be performed under electrically hazardous conditions as follow: in damp locations or wearing wet clothing; on metal structures such as floors, gratings, or scaffolds; when in cramped positions such as sitting, kneeling, or lying; or in occasion when there is a high risk of unavoidable or accidental contact with the work piece or ground. Must use additional safety precautions: semiautomatic DC constant voltage (wire) welder, DC manual (Stick) welder and AC welder with reduced open-load voltage.
- Maintain the electrode holder, ground clamp, welding cable and welding machine in good, safe operating condition. Replace damaged part immediately.

Electric and magnetic fields (EMF) may be dangerous

- If electromagnetic interference is found to be occurring, the operator is obliged to examine any possible electromagnetic problems that may occur on equipment as follow:

- minas, signal and data-transmission leads

- IT and telecoms equipment

- measurement and calibration devices

- Wearers of pacemakers

- Measures for minimizing or preventing EMC problems:

- Mains supply

If electromagnetic interference still occurs, despite the fact that the mains connection in accordance with the regulations, take additional measures

- Welding cables

Keep these as short as possible

Connect the work cable to the work piece as close as possible to the area being welded.

Lay tem well away from other cables.

Do not place your body between your electrode and work cables.

- Equipotential bonding

- Workpiece grounding (earthing)

- Shielding

Shield the entire welding equipment and other equipment nearby.

ARC rays can burn

- Visible and invisible rays can burn eyes and skin.

- Wear an approved welding helmet or suitable clothing made from durable flame-resistant material (leather, heavy cotton, or wool) to protect your eyes and skin from arc rays and sparks when welding or watching.

- Use protective screens or barriers to protect other nearby personnel with suitable, non-flammable screening and/or warn them not to watch the arc nor expose themselves to the arc rays or to hot spatter or material.

Fumes and gases can be dangerous

- Welding may produce fumes and gases, breathing these fumes and gases can be hazardous to your health.

- When welding, keep your head out of the fume. If inside, ventilate the area at the arc to keep fumes and gases away from the breathing zone. If ventilation is not good, wear an approved air-supplied respirator.

- Work in a confined space only if it is well ventilated, or while wearing an air-supplied respirator.

- Welding fumes and gases can displace air and lower the oxygen level causing injury or death. Always use enough ventilation, especially in confined areas, to insure breathing air is safe.

Welding and cutting sparks can cause fire or explosion

- When not welding, make sure the electrode circuit is not touching the work or ground. Accidental contact can cause sparks, explosion, overheating, or fire. Make sure the area is safe before doing any welding.

- Welding and cutting on closed containers, such as tanks, drums, or containers, can cause them to blow up. Make sure proper steps have been taken.

- When pressure gas is used at the work site, special precautions are required to prevent hazardous

situations.

- Connect work cable to the work as close to the welding zone as practical to prevent welding current from passing too long and creating fire hazards or overheat.
- Wear oil-free protective garments such as leather gloves, heavy shirt, cuffless trousers, high shoes, and a cap. Wear ear plugs when welding out of position or in confined places. Always wear safety glasses with side shields when in a welding area.
- Be attention that welding sparks and hot materials from welding can easily go through small cracks and openings to adjacent areas and start a fire. Remove fire hazardous from the welding area, if not possible, cover them thoroughly. Do not weld where flying sparks can strike flammable material and where the atmosphere may contain flammable dust, gas, or liquid vapors (such as gasoline).
- Protect yourself and others from flying sparks and hot metal. Remove any combustibles from operator before perform any welding.
- Keep a fire extinguisher readily available.
- Empty containers, tanks, drums, or pipes which have combustibles before perform welding.
- Remove stick electrode from electrode holder or cut off welding wire at contact tip when not in use.
- Apply correct fuses or circuit breakers. Do not oversize or bypass them.

Cylinder can explode if damaged

- Pressure gas cylinders contain gas under high pressure. If damaged, a cylinder can explode. Since gas cylinders are normally part of the welding process, be sure to treat them carefully.
- Cylinders should be located away from areas where they may be struck or subjected to physical damage. Use proper equipment, procedures, and sufficient number of persons to lift and move cylinders.
- Always install cylinders in an upright position by securing to a stationary support or cylinder rack to prevent falling over or tipping.
- Keep a safe distance from arc welding or cutting operations and any other source of heat, sparks, or flame.
- No touching cylinder by welding electrode, electrode holder or any other electrically “hot” parts. Do not drape welding cables or welding torches over a gas cylinder.
- Use only correct compressed gas cylinders, regulators, hoses, and fittings designed for the process used; maintain them and associated parts in good condition.
- Use only compressed gas cylinders containing the correct shielding gas for the and properly operating regulators designed for the gas and pressure used. All hoses, fittings, etc. should be suitable for the application and maintained in good condition.
- Open the cylinder valve slowly and keep your head and face away from the cylinder valve outlet.
- Valve protection caps should be kept in place over valve expect when the cylinder is in use or connected for use.

Hot parts can burn

- Do not touch hot parts with bare hand or skin.
- Ensure equipment is cooled down before perform any work.
- If touching hot parts is needed, use proper tools and/or wear heavy, insulated welding gloves and clothing to prevent burns.

Flying metal or dirt can injure eyes

- When welding, chipping, wire brushing, and grinding can cause sparks and flying metal. It can hurt your eyes.
- Remember wear appropriate safety glasses with side shields when in welding zone, even under your welding helmet.

Noise can damage hearing

- Noise from some processes or equipment can damage hearing.
- Remember wear approved ear protection to protect ears if noise level is high.

Moving parts can injure

- Stay away from moving parts such as fans.
- Stay away from pinch points such as drive rolls.
- Keep all doors, panels, covers, and guards closed and securely in place.
- Have only qualified persons remove doors, panels, covers, or guards for servicing and maintenance.
- Reinstall doors, panels, covers, or guards when servicing and maintenance is finished and before reconnecting input power.

Overuse can cause overheating

- Use machine follow duty cycle. Reduce current or reduce duty cycle before starting to weld again.
- Allow cooling period.
- Do not block or filter airflow to unit.

Static can damage PCB

- Always wear wrist straps before touching PCB or parts.
- Use proper static-proof bags and package to store or move PCB.

Safety markings

- Equipment with CE-markings fulfils the basic requirements of the Low-Voltage and Electromagnetic Compatibility Guideline (e.g. relevant product standards according to EN 60 974).

Safety markings

- The equipment with the CCC mark meets the basic requirements stipulated in the Chinese standards GB / T15579.1-2013 and GB / T8118.

Safety markings

- This marking means that the product is certified for both the U.S. and Canadian markets, to the applicable U.S. and Canadian standards. The preferred location of the indicators is as shown.

Contents

1 - GENERAL REMARKS....8

1-1 Power source features....8

1-2 Functional principle....8

1-3 Output characteristics....9

1-4 Duty cycle....9

1-5 Applications....10

1-6 Warning label....10

2 –VERSIONS BRIEFS....11

3 -BEFORE COMMISSIONING....11

3-1 Utilization for intended purpose only....11

3-2 Machines set-up regulations....11

3-3 Power source connection....11

3-4 Welding cables instruction....12

4- PoWer MIG3500 LST....14

4-1 System components....14

4-2 Basic equipments for welding....14

4-3 Control panel....14

4-4 Submenu....20

4-5 Job mode....27

4-6 Interface....30

4-7 Installation....31

4-8 MIG/LST welding process....34

4-9 Technical data....35

4-10 Dimension....35

4-11 Disassembly and reassembly....36

5-TROUBLE SHOOTING....39

5-1 Error code....40

5-2 Trouble shooting 42

6-CARE AND MAINTENANCE 44

1 - GENERAL REMARKS

1-1 Power source features

This series of power sources apply IGBT soft switch inverter technology. Its internal control system applies DSP which ensures quick response to any change during the welding process so as to achieve precise control of welding process and ensure optimal welding results. The strong ability of arc self-adjustment ensures a highly stable welding current against grid fluctuation and arc length change to get optimal results.

This series has 3 core system, almost can communicate with all robots on market by digital /analogue interface. Perform welding work easily.

Features and benefits:

- High speed DSP+FPGA multi-core system, can shorten control period to control arc effectively;
- Periodic molten drop control technology, molten pool is more stable, with beautiful welding seam formation;
- Welding spatter for carbon steel decreases 80%, reduce spatter clean work; heat input reduces 10%~20%, small deformation;
- With precise pulse waveform control technology, and lower heat input to avoid burn through and deformation, also reduce 80% spatter, realize very thin plate low spatter welding. This technology is widely used in bicycle, fitness equipment, automobile component, and furniture industries;
- Work with robot like KUKA, ABB, FANUC, YASKAWA, COMAU, IGM, etc (Optional:PoWer MIG 3500 LST-R);
- Integrated analog communication, international Devicenet digital communication and Ethernet communication interface, realize seamless integration with robot (Optional);
- Open type communication mode, robot can control all parameters of welding machine (Optional);
- Built-in start point test function, can achieve welding seam start point test without adding robot hardware (Optional).

1-2 Functional principle

This series of power sources adopt IGBT soft switch inverter technology. 3-phase input voltage are rectified by rectifier, inverted into HF AC, reduced by HF transformer, rectified and filtered by HF rectifier, chopped and then output DC power suitable for welding. After this process, the welding machine dynamical responsive speed has been greatly increased, so the size and weight are reduced noticeably result in energy saving. The control circuit's closed-loop control makes the power source enjoy strong ability against power grid fluctuation and perfect welding performance. The schematic diagram is as shown in Fig. 1-2-1:

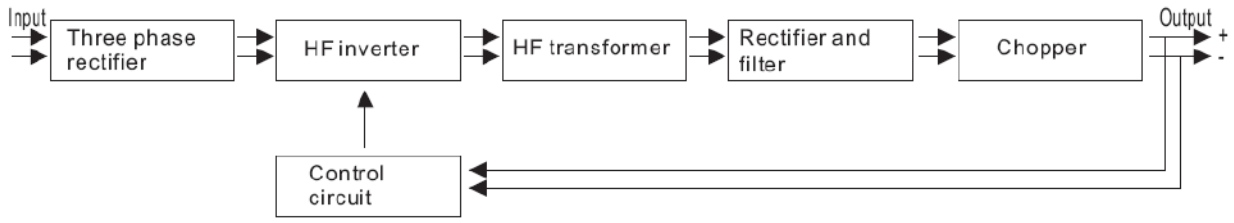

Fig.1-2-1: Schematic diagram

1-3 Output characteristics

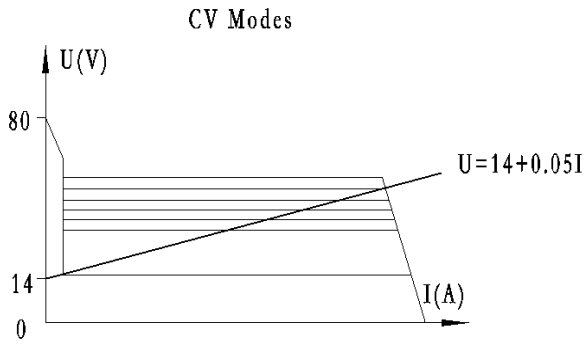

Fig. 1-3-1: Output characteristics

1-4 Duty cycle

Duty cycle is percentage of 10 minutes that a machine can weld at rated load without overheating. If overheats, t t(s) will open, output stops. Wait for fifteen minutes for the machine to cool down. Reduce amperage or duty cycle before welding.

NOTE! Exceeding duty cycle can damage unit and void warranty.

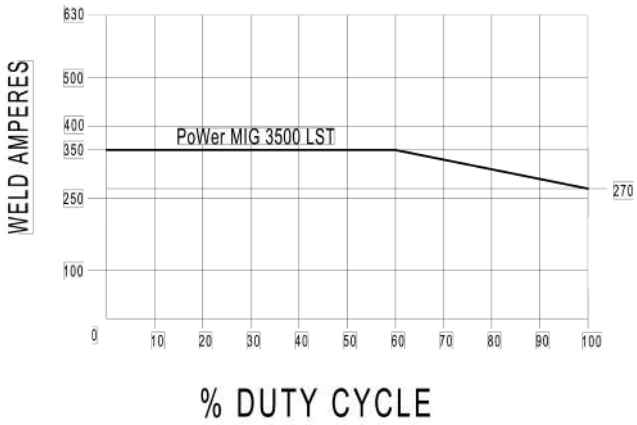

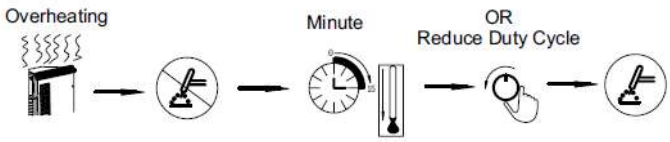

Fig. 1-4-1: Duty cycle

1-5 Applications

PoWer MIG3500 LST welding machine can realize thin plate (less than 3mm thickness) welding of stainless steel, galvanized sheet, carbon steel.

The power source is designed for the following applications:

- Automated application
- Automobile and components supply industry
- Chemical plant construction
- Boiler and pressure vessel
- Shipyards
- Power plant construction
- Vehicle manufacturing
- Machinery industry
- Robot application (Optional)
- Others

1-6 Warning label

The warning label is affixed onto the top of the power source, and it must not be removed or painted over.

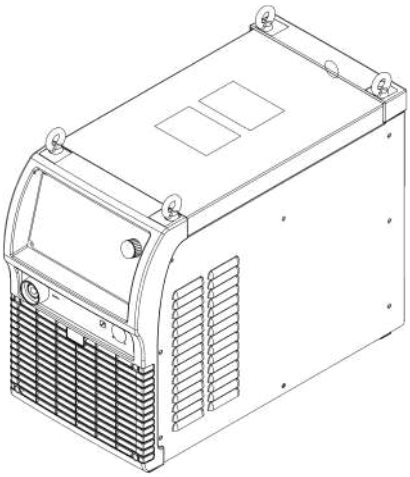

Fig. 1-6-1: Warning label

2 –VERSIONS BRIEFS

Professional welding of special materials requires special welding parameters. Different models of the power sources are matched to different welding

- PoWer MIG 3500 LST

PoWer MIG 3500 LST welding machine is fully digital MIG series with new Low Spatter technology. Due to high end DSP + FPGA and waveform control technology. It provides outstanding control of arc and weld pool and bring spatter free welding quality and high efficient productivity. It has MIG, LST (low spatter technology) welding processes.

3 -BEFORE COMMISSIONING

Warning! Operating the equipment incorrectly can cause serious injury and damage. Do not use the functions described here until you have read and completely understood “safety rules”.

3-1 Utilization for intended purpose only

PoWer MIG 3500 LST welding machine may only be used for MIG, LST. Utilization for other purposes, or in any other manner, shall be deemed to be "not in accordance with the intended purpose". The manufacturer shall not be liable for any damage resulting from such improper use. Operate, inspect and maintain should follow all the instructions given in this manual.

3-2 Machines set-up regulations

According to test, protection degree of this power source is IP23S. However, the internal key components must be protected from direct soaking.

Warning! A machine that topples over or falls from its stand can cause injury. Place equipment on an even, firm floor in such a way that it stands firmly.

The venting duct is very important for safety protections. When choosing the machine location, make sure it is possible for the cooling air to freely enter and exit through the louvers on the front and back of machine. Any electro conductive metallic dust like drillings must not be allowed to get sucked into the machine.

3-3 Power source connection

- The power source is designed to run on the voltage given on the nameplate.

- The mains cables and plugs must be mounted in accordance with the relevant technical standards.

- The power supply sockets that come with power source are designed to use strictly according to the marked voltages.

Note! Incorrect installations can lead to protection fails or partial fails. The fuse of mains plug and socket must be suitable for local power supply.

3-4 Welding cables instruction

When welding, please pay attention to the followings:

a. The welding cables should be kept as short as possible;

b. If extended cable is used, please do as shown in Fig. 3-4-1.

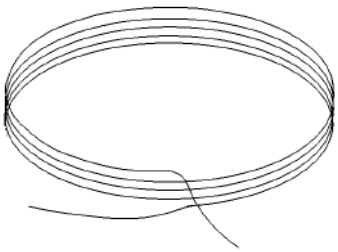

Wrong

Coil the excess ground cable and welding cable in same direction respectively.

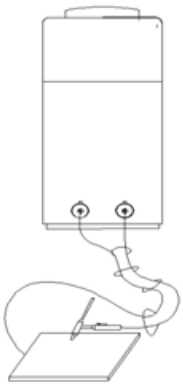

Correct

Straighten the ground cable and welding cable and make them close to each other.

Bundle the ground cable and welding cable together, running the wires close to the ground.

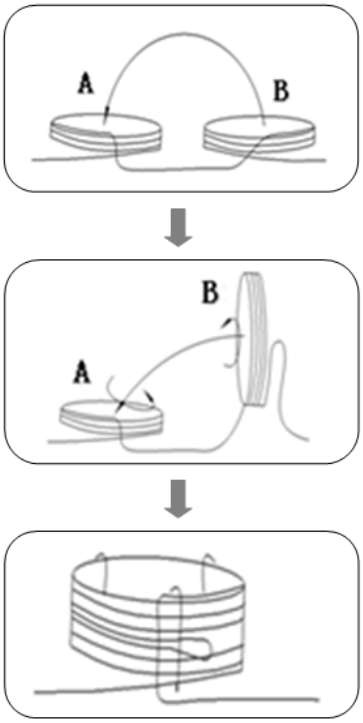

Correct

When the excess cables are only be used by rolling up, coiling the cables to two windings in reverse direction and overlap them.

The number of turns for A is same as the number of turns for B.

Handle the welding cable and ground cable according to the above-mentioned method.

Fig. 3-4-1: Welding cables instruction

4- PoWer MIG3500 LST

4-1 System components

PoWer MIG3500 LST can be equipped with many different accessories and can be used in various sites with different configurations.

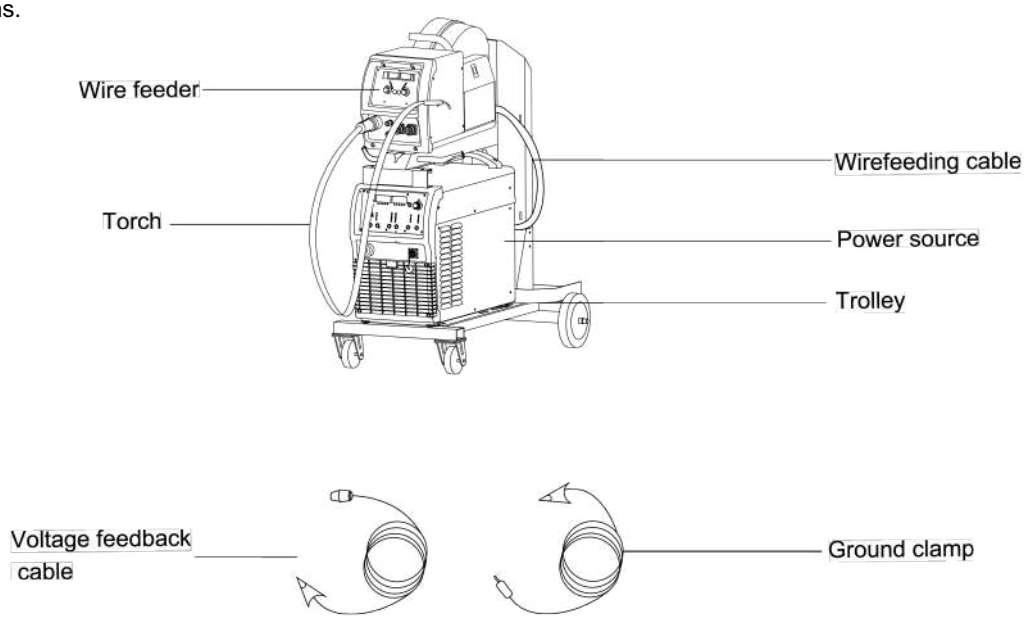

Fig. 4-1-1: System components

4-2 Basic equipments for welding

Only be equipped with the necessary accessories, can the power source operates well. The following is the needed accessories list.

- Power source
- Ground cable
- Welding torch
- Gas regulator, gas hose, gas cylinder (to supply the machine with shielding gas)
- Wire feeder
- Welding wire

4-3 Control panel

The functions on the control panel are all arranged in a very logical way. The various modes and parameters needed for welding are easy to select by pressing the appropriate button; parameters are easy to adjust by rotating encoder.

Note! You may find that your machine has certain functions or some parameters that are not described in this

operating manual. Also, certain illustrations may be very slightly different from the actual controls on your machine. However, these controls function in exactly the same way.

Warning! Operating the equipment incorrectly can cause serious injury and damage. Do not use the functions described here until you have read and completely understood all content of this manual.

Note! Control panel of welding machine is for function selection and some parameters setting. Welding parameters can be adjusted by panel control (sub-menu parameter P09 is ON) and remote control (sub-menu parameter P09 is OFF).

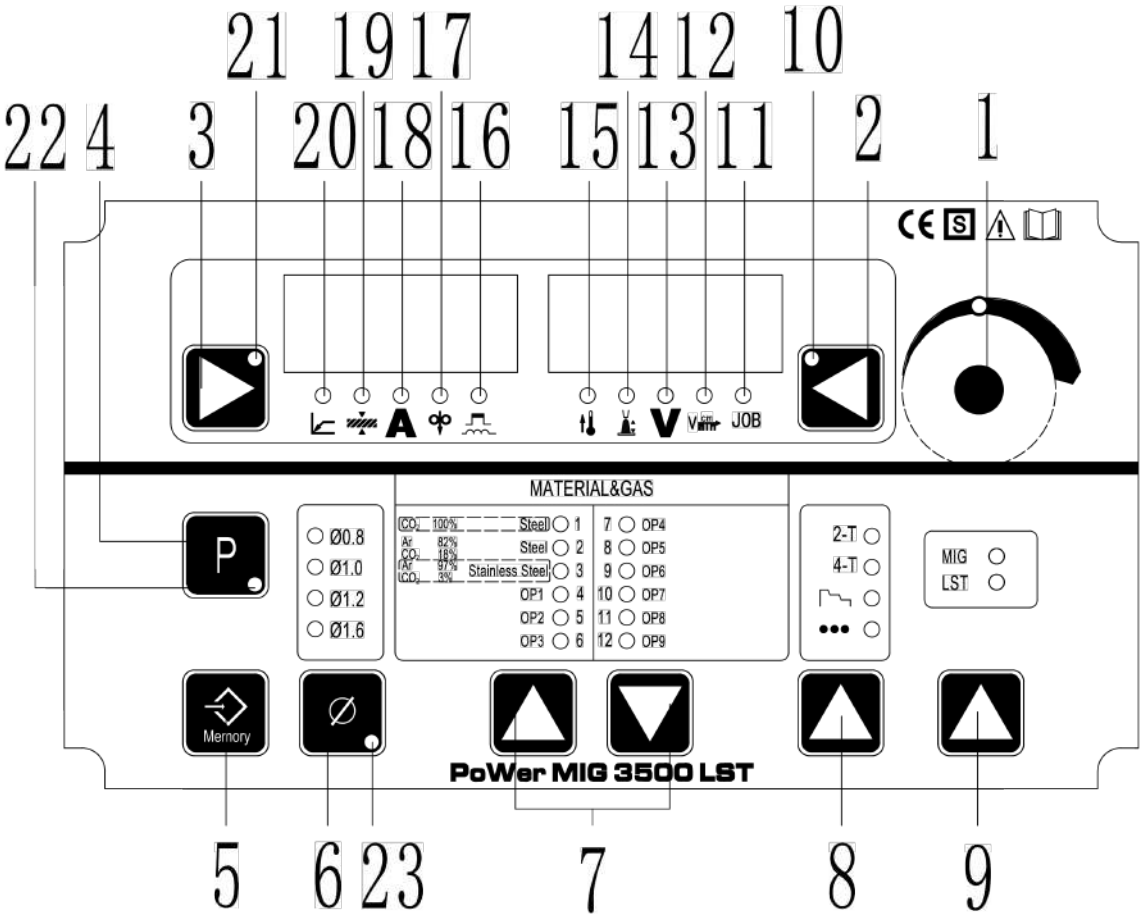

Fig. 4-3-1: Control panel

1.Adjustment knob

Adjust the parameters. When the light is on, this knob can be used to adjust parameters of selected item.

Reset:Press adjustment knob (1) for about 5 seconds, it comes back to factory set.

Important! Values increase in clockwise direction while values decrease in anti-clockwise rotation. To turn the knob left or right while pressing it will achieve quick adjustment.

2. Parameters selection button F2

Press this button, one parameter indicator light is on, the corresponding parameter is chosen; keep pressing this button can switch among the following parameters:

- Arc length adjustment
- Welding voltage
- Job (Channel) No.

If both the indicators of parameter selection button and the adjustmentknob (1) are on, the indicated/ selected parameter can be adjusted with the knob (1).

3.Parameters selection button F1

Press this button, one parameter indicator light is on and the corresponding parameter is chosen; keep pressing this button can switch among the following parameters:

- Welding current
- Wire speed
- Arc force/ Arc stiffness

Important!On Panel control mode, press F1 to choose one of the above parameters, and value of the parameter can be adjusted by the knob (1).

4. CALL button

Load stored set of parameters.

5.STORE button

- For accessing the sub-menu parameter set-up menu or (in job mode) for storing parameter settings.

- During creating or correcting a job, store parameter settings.

6.Wire diameter button

For selecting wire diameter.

7.Wire material selection button(s)

For selecting the filler metal and shielding gas type. OP is used for upgrade.

8.Torch operation modes button(s)

For selecting the operating mode of the torch.

- 2-step mode (standard operating mode)

- 4-step mode (the trigger lock mode)

- Special 4-step mode (arc-starting and crater-filler parameters are adjustable)

- Spot welding mode

Operating mode of welding torch

Graphic symbol

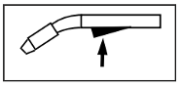

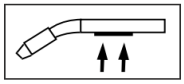

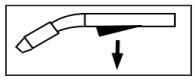

Fig. 4-3-2: Press torch trigger Fig. 4-3-3: Hold torch trigger Fig. 4-3-4: Release torch trigger

P01…….Burn back time

P03…….Gas pre-flow time

P04…….Gas post-flow time

P05…….Initial period: the base metal can be heated up rapidly, despite the fast thermal dissipation at the start of welding

P06…….Crater filler parameter: Prevent burn-through caused by too much heat at the welding ends.

P07…….Transitional period: the time from welding current to crater-filler current.

P08…….Spot welding time

I……..Welding current: Uniform thermal input for the preheated base metals.

- 2-step mode

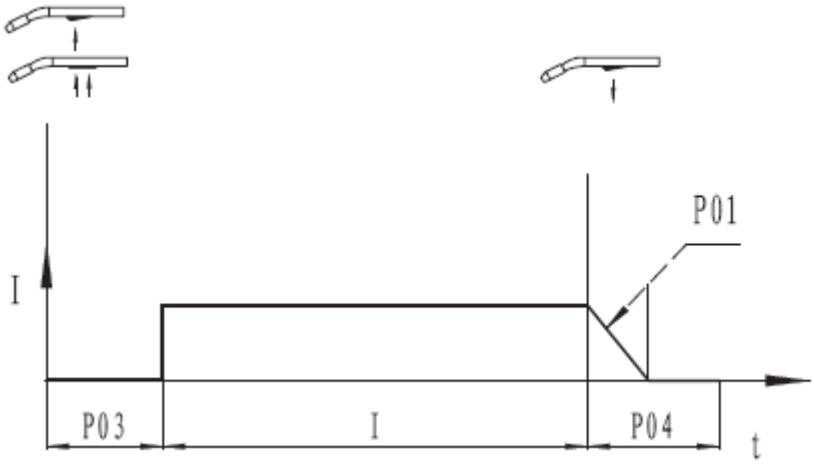

Fig. 4-3-5: 2-step mode

- 4-step mode

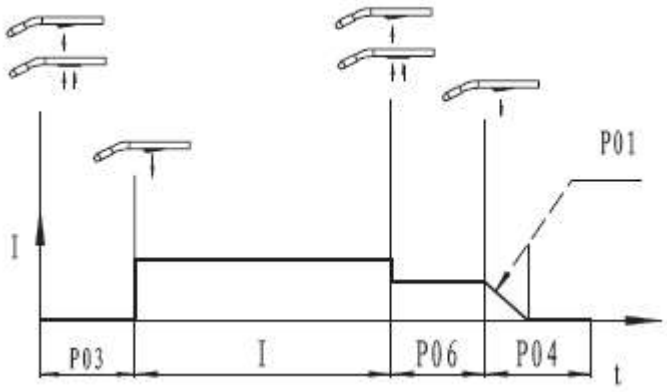

Fig. 4-3-6: 4-step mode

- Special 4-step mode (arc-starting and crater-filler parameters are adjustable)

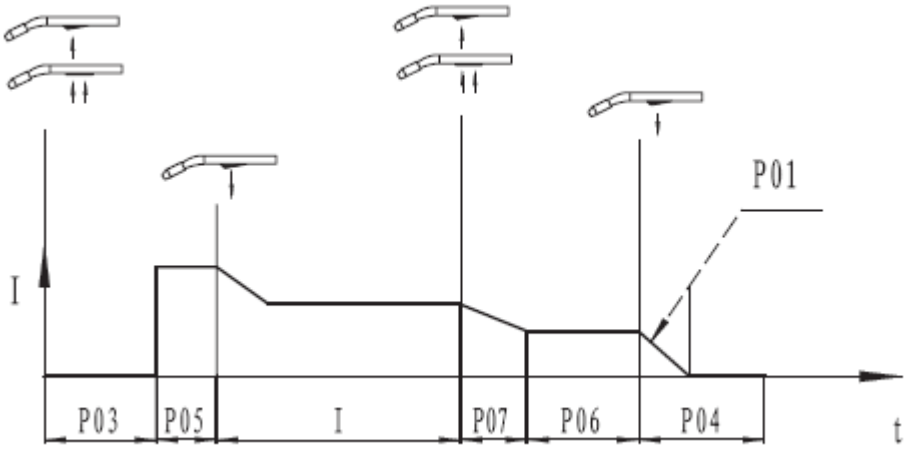

Fig. 4-3-7: Special 4-step mode

- Spot welding mode

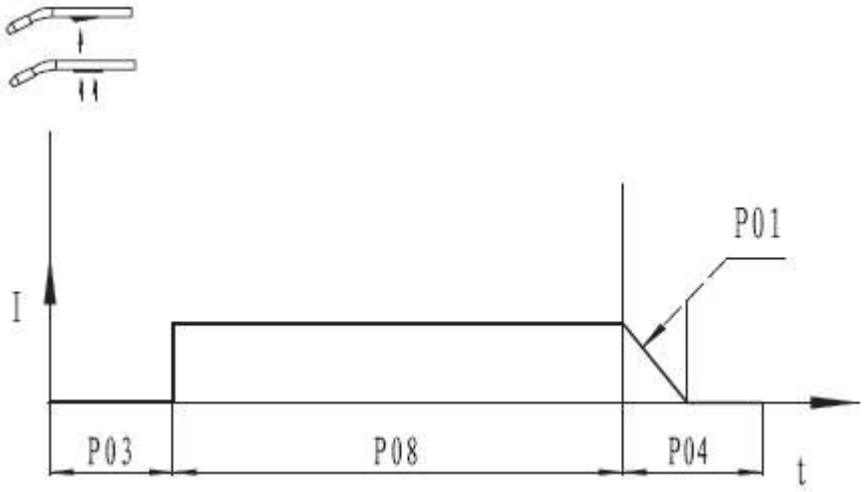

Fig. 4-3-8: Spot welding mode

9.Process button

For select welding process.

- MIG

- LST

10. F2 selection button indicator

When the indicator lights up, F2 works

11. “JOB” No.

For receiving parameter records/job numbers that were previously saved with “Store” button.

12.Welding speed indicator

When the light is on, the right-hand displayer shows the preset welding speed (cm/min) , and thewirespeed and welding current & voltage are calculated as a function of the “a”-dimension parameter (20)

13. Welding voltage indicator

When the indicator lights up, the right-hand displayer shows the preset or actual welding voltage.

Important! Power source open circuit voltage is variable. In STICK mode, open circuit voltage displayed is about 23V before welding; after starting arc, it increases as the real situation, and may be up to 79V, so as to get ideal arcing characteristic.

14. Arc-length correction parameter

For correcting the arc length (-5.0-+5.0) by adjustment knob (1) when indicator is on, the right-hand displayer shows the arc length value when the indicator lights up.

- \- shorter arc length
- 0 neutral arc length
- \+ longer arc length

Important!The range (-5.0-+5.0) means that, when preset welding current, the arc length value is -50％～+50％ of the corresponding welding voltage.

15. Temperature Indicator

This is reserved function, cannot operate right now.

16. Arc force/ Arc stiffness

Change the arc stiffness during short circuit transition.

-The arc is hard and stable

0 Medium arc

+ Soft arc and small splash

17.**Wire feeding speed indicator**

When the indicator is on, the left-hand displayer shows the wire feeding speed (M/min), when adjust this button, the relevant parameters will change automatically

18.Welding current indicator

When the indicator is on, the left-hand displayer shows the preset or real welding current values

19.Sheet thickness indicator

When the indicator is on, the left-hand displayer shows the preset sheet thickness (mm). The relevant parameters will change automatically when this value is changed.

20. “a” dimension indicator

When the indictor is on, the left-hand displayer shows “a” dimension (mm). Wire speed and welding current & voltage are calculated as a function of the “a”-dimension parameter

21. F1 selection button indicator

When the indicator lights up, F1 button works.

22.CALL program mode indicator

When the indictor is on, power source is in call program mode.

23. Submenu parameters regulation indicator

This indictor is on when in submenu parameters adjustment.

4-4 Submenu

Sub-menu parameter

In order to achieve an optimum welding result, it is necessary in some cases to make corrections of the arc-length, arc force as well as parameters like pre-gas time, post-gas time and slow wire feeding. For details of how to set the Sub-menu parameters, please refer to “Sub-menu parameter set”.

Item	Parameters	Setting Range	Min. Value	Factory Setting
P01	Burn back time	0.01～2.00s	0.01s	0.10s
P02	Slow wire feeding	1.0～22.0M/min	0.1 M/min	1.5 M/min
P03	Gas pre-flow time	0.1～10.0s	0.1s	0.20s
P04	Gas post-flow time	0.1～ON	0.1s	2.0s
P05	Initial period	1～200％	1％	135％
P06	Crater fillerperiod	1～200％	1％	50％
P07	Transitional period	0.1～10.0s	0.1s	2.0s
P08	Spot welding time	0.01～9.99s	0.01s	3.0s
P09	Digital/Analog signal selection	OFF/ON	——	OFF
P10	Water cooling selection	OFF/ON	——	ON
P11	Double pulse frequency	0.5～5.0Hz	0.1Hz	OFF

P12	High pulse group arc length adjustment	-5.0～+5.0	0.1	0
P13	Double pulse speed offset	0～2m	0.1m	2m
P14	High pulse group duty cycle	10～90%	1%	50%
P15	Pulse mode	OFF/UI/II/UU	——	OFF
P16	Fan-on demand cooling time	5～15min/ON	5min	5min
P17	Special 2-step arc start time	OFF/0～10s	0.1s	OFF
P18	Special 2-step arc stop time	OFF/0～10s	0.1s	OFF
P19	Separate adjustment mode	OFF/ON	——	OFF
P22	Pulse current when start arc	-50%~50%	1%	0
P23	Pulse time when start arc	-50%~50%	1%	0
P24	Short circuit rise rate	-50%~50%	1%	0
P25	Short circuit rise knee point	-50%~50%	1%	0
P26	Arcing peak value	-50%~50%	1%	0
P27	Arcing peak time	-50%~50%	1%	0
P30	Inch wire feeding speed	1.0~21.0m/min	0.1	3m/min
P31	Molten drop transition time 1	50%~50%	1%	0
P32	Molten drop transition time 2	50%~50%	1%	0
P33	Spatter adjust	50%~50%	1%	0
P34	Ball removing voltage	50%~50%	1%	0
P35	Ball removing voltage time	50%~50%	1%	0

Table 4-4-1: Sub-menu parameter

Note! P11-P14 is available on double pulse function; P20-P21 is available on twin wire welding mode.

- P01 Burn back time

If too long time, the wire will burn back too much with too large melting ball at the end of wire; if too short time, the wire will stick with the work piece

- P02 Slow wire feeding

With too quick feeding speed, the wire will be easily exploding with failed arc-starting; if the feeding speed is slower than the melting speed, the long arc will cause conductive tip burned.

- P03 Gas pre-flow time

Longer time will cause waste of gas and low efficiency; shorter time will cause air hole during arc-starting

- P04 Gas post-flow time

Longer time will cause waste of gas; shorter time will cause air hole during crater filler period

- P05 Initial period

Special 4-step mode and set the percentage between initial period and pre-set parameters. When adjust the initial period, press F2 and then adjust dial (1), make correction of the arc length of the initial period. Press F2 again to exit.

- P06 Crater filler period

4-sept or special 4-step mode, set the percentage between crater filler period and pre-set parameters. When adjust the crater filler, press F2 and then adjust dial (1), make correction of arc length of the crater filler. Press F2 again to exit.

- P07 Transitional period

During the special 4-step mode, the time cost from starting current to normal welding current and then to post current

- P08 Spot welding time

Choose spot welding process and set the welding time

- P09 Digital/Analog signal selection

In ON mode, welding parameters can be adjusted by welding machine control panel, digital wire feeder control panel; in OFF mode, welding parameters can be adjusted by analog controller.

- P10 Water cooling selection

OFF: gas cooled mode, choose gas cooled torch, no water shortage protection;

ON: water cooled mode, choose water cooled torch, there is water shortage protection.

- P16 Fan-on demand cooling time

Set the time that fan continues to work after power source stops welding.

- P17 Arc start time

On special 2-step mode, time for start period. When choose at number, it is time for start period, when reach to this time, will turn to welding standard; when choose at OFF, the function closes.

- P18 Arc stop time

On special 2-step mode, time for crater filler time. When choose at number, it is time for crater filler, when reach to this time, will turn to stop welding standard; when choose at OFF, the function closes.

- P19 Separate adjustment mode

In OFF mode, current and voltage is synergic adjusted; in ON mode, current and voltage is separately adjusted.

- P22 Pulse current when start arc

Too small will cause wire touches with work piece, and arc start fails. Too large will cause large energy when start arc, and arc has defect.

- P23 Pulse time when start arc

Too short will cause difficult to start arc; too long will cause large energy when start arc, and arc has defect.

- P24 Short circuit rise rate

The higher the short circuit current rise rate is, the harder the arc is, and the large spatter is; otherwise, arc will be softer, spatter will be lesser. Too small will cause unstable welding.

- P25 Short circuit rise knee point

The higher the short circuit rise knee point is, the harder the arc is; otherwise, the softer the arc is. Recommend to use factory setting parameter value.

- P26 Arcing peak value

The higher the arcing peak value is, the longer the arc length is, the stronger the directivity is; otherwise the shorter the arc is, the weaker the arc directivity is. Too low value of this parameter will cause unstable welding.

- P27 Arcing peak time

The longer the arcing peak time is, then the larger arc energy is, the larger welding heat affected zone is; otherwise, the smaller arc energy is, the smaller welding heat affected zone is. Too low value of this parameter will cause deformed weld.

- P30 Inch wire feeding speed

Set manual wire feeding speed.

- P31 Molten drop transition time 1

This parameter is used together with P32, the longer the time is, the larger arc energy is, the longer droplet transfer time is, the softer arc is; otherwise, the smaller arc energy is, the shorter droplet transfer time is, the harder arc is. Recommend to use factory setting parameter value.

- P32 Molten drop transition time 2

This parameter is used together with P31, the longer the time is, the larger arc energy is, the longer droplet transfer time is, the softer arc is; otherwise, the smaller arc energy is, the shorter droplet transfer time is, the harder arc is. Recommend to use factory setting parameter value.

- P33 Spatter adjust

The longer the parameter is, the larger welding spatter is; otherwise, the smaller welding spatter is. Too small will cause unstable welding, recommend to use factory setting parameter value.

- P34 Ball removing voltage

When remove welding ball, set welding ball removing voltage.

- P35 Ball removing voltage time

When remove welding ball, set welding ball removing time.

Sub-menu parameter adjustment

Enter and exit from the sub-menu and parameters adjustment as Fig. 4-4-1:

1. Press and hold the save key and the wire diameter selection key at the same time, the submenu indicator lights, and enter the submenu.

Important! The last parameter to be selected is displayed! The first-time enter shows “P01”.

2. Press wire diameter selection button (6) to select parameters; Note! Also can use wire material selection button(s) (7) to select.

3.Use the adjusting knob to adjust the parameter value;

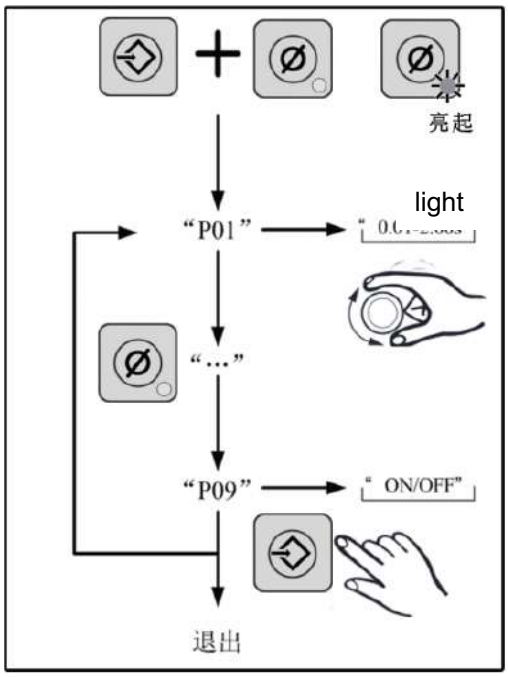

exit

Fig.4-4-1 Sub-menu parameters set

Important! Adjust the parameters of current percent and arc-length correction firstly before select the parameters of initial standard (P05) and arc stopping standard (P06). Press F2 to choose the desired one and then changes the parameters by adjusting knob (1).

4. Press store button (5) again and then exit from the sub-menu mode. The indicator (23) is off meaning the exiting from the sub-menu.

Sub-menu parameter for arc start/ crater filler/ short circuit control characteristic

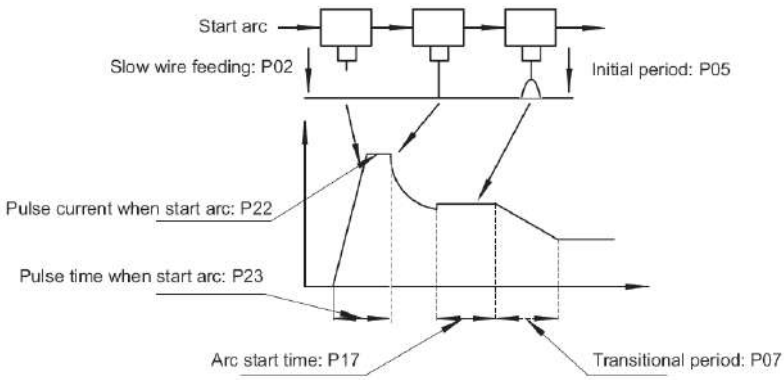

Fig. 4-4-2 Operating mode sequence diagram of start arc

When welding voltage and current settings are correct, but not easy to start arc, please adjust sub-menu parameter as follow table.

Item	Function	Adjust method
P02	Wire feed speed before ignition arc	If the welding wire strikes the workpiece quickly before starting the arc, the spatter is severe during the starting arc → reduce the P02 value; if the arc is not open or the starting is very slow → increase the P02 value
P05	Initial period, default state is OFF	Arc start section in weld seam is narrow or workpiece does not melt – increase the P05/P17 value Arc start section in weld seam is wide or workpiece burned through – reduce the P05/P17 value No problem of arc start section in weld seam - OFF
P17	Initial period function time (arc start time)	
P07	Transitional time from initial period to welding period	Formation changes a lot for arc start section in weld seam – increase the P07 value No problem of arc start section in weld seam - OFF
P22	Pulse current when start arc	Longer arc when start arc, work piece burns seriously, large spatter – increase the P22/P23 value Difficult to start arc, wire explodes, work piece and wire does not fuse - OFF
P23	Pulse time when start arc	

Table 4-4-2 Sub-menu parameter

Sub-menu parameter for crater filler control characteristic

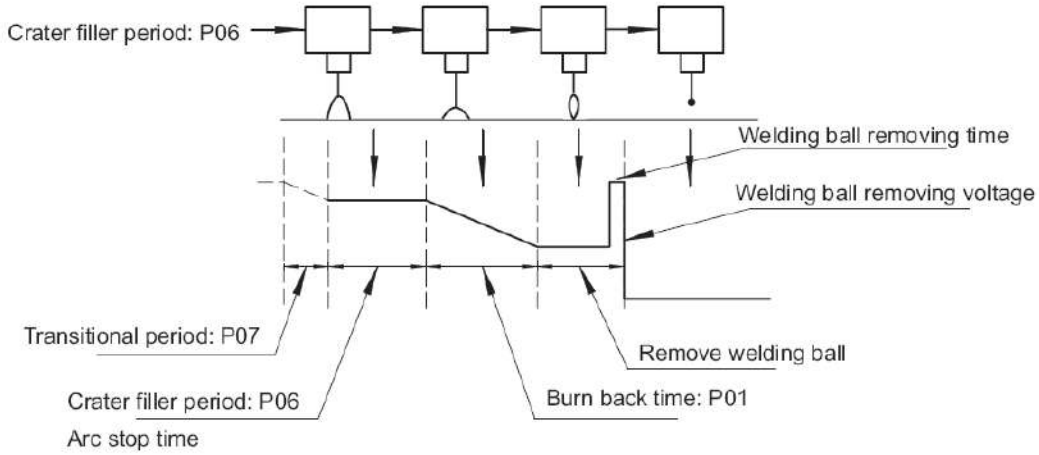

Fig. 4-4-3 Operating mode sequence diagram of crater filler

Item	Function	Adjust method
P07	Transitional time from welding period to crater filler period	Weld seam formation is narrow – increase the paramter value Weld seam formation is wide – reduce the parameter value No problem of weld seam formation - OFF
P18	Crater filler time, default is OFF	
P06	Crater filler period	
P01	Burn back time	Wire sticks with work piece, work piece burns seriously - increase the P01 value Wire sticks with contact tip - reduce the P01 value
P34	Ball removing voltage	No arc start when re-start arc – increase the P34/P35 value Arc is long when re-start arc, work piece burns – reduce the P34/P35 value
P35	Ball removing voltage time	

Table4-4-3 Sub-menu parameter

Sub-menu parameter for short circuit control characteristic

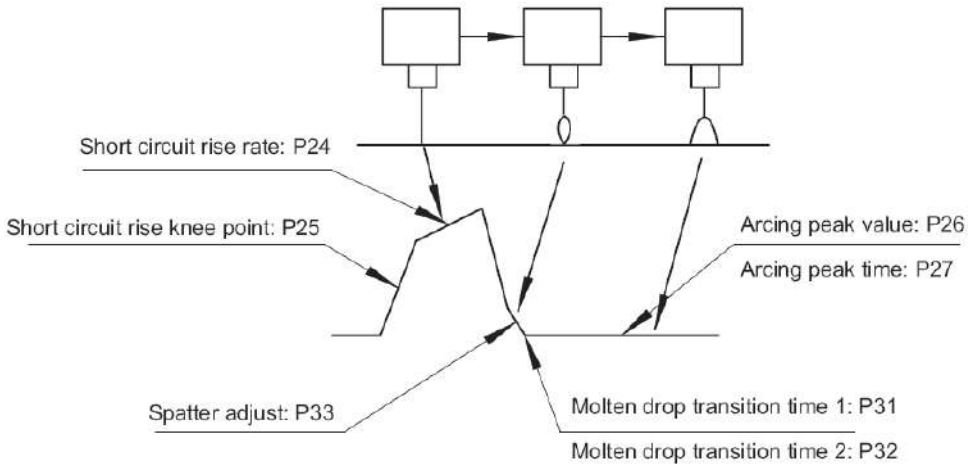

Fig.4-4-4 Operating mode sequence diagram of short circuit control

When welding voltage, welding current are correct, but cannot perform stable welding, please adjust short circuit control parameter, to improve welding stability and weld seam formation.

On condition of stable welding, fine adjust P33 to adjust welding spatter.

Item	Function	Adjust method
P33	Spatter adjust	Unstable welding – increase the P33 value Large spatter during welding – reduce the P33 value
P24	Short circuit rise rate	Large spatter, wire explodes – increase the P24/P25 value Unstable welding arc – reduce the P24/P25 value
P25	Short circuit rise knee point	
P26	Max. length of welding arc	Small welding arc energy, short welding arc, need flat weld seam –increase the P26/P27 value No short circuit of molten drop, arc length is longer- reduce the P26/P27 value
P27	Max. energy of welding arc	

Table 4-4-4 Sub-menu parameter

4-5 Job mode

“Job Mode” enhances the quality of welding, both in semi-automatic and fully automated operation. Traditionally, technical parameters of some repeated operations need to be written down for record. In Job Mode, it is now possible to store and retrieve up to 100 different jobs.

The following symbols are used in Job Mode, on the left displayer:

---……..No job in this program location (only when you try to retrieve a job from this location, otherwise nPG)

nPG……No job in this program location

Pro…….Job is being created /copied in this program location

PrG……There is a job in this program location

Creating a job

The machine comes with no jobs pre-programmed. A job has to be created before it can be retrieved. To create a job, proceed as follows:

1.Set the welding parameters that you want to store as a “Job”.

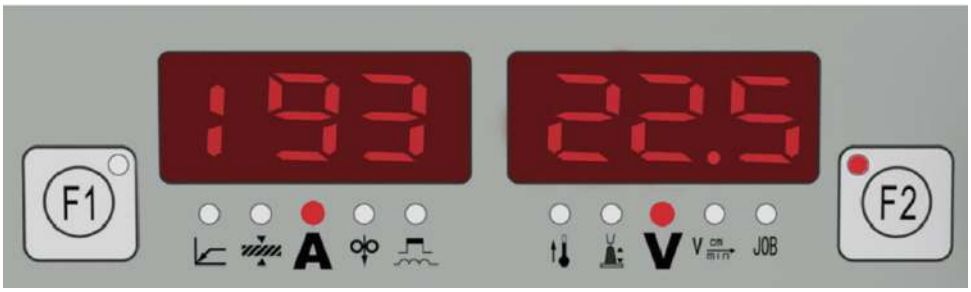

2.Briefly press the Store button (5) to enter into the job menu. The first vacant program location for the job is now indicated.

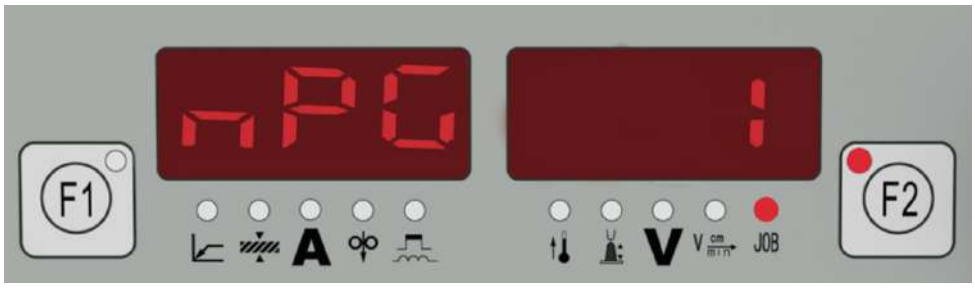

3.Select the program location with the adjustment knob (1), or else leave the suggested program location unchanged.

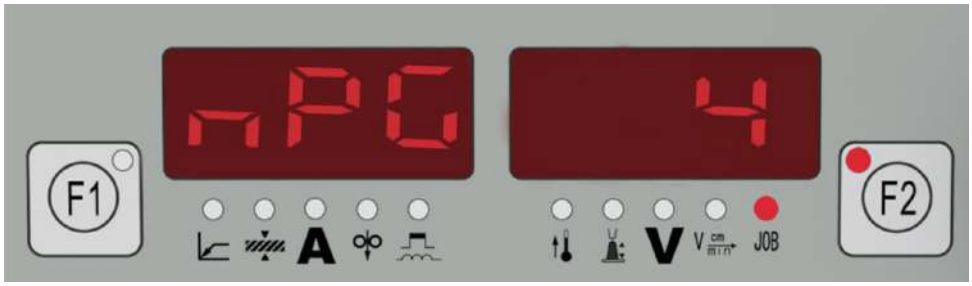

4.Press and hold the Store button (5). The left displayer reads “Pro” –the job is stored in the program location you have just selected.

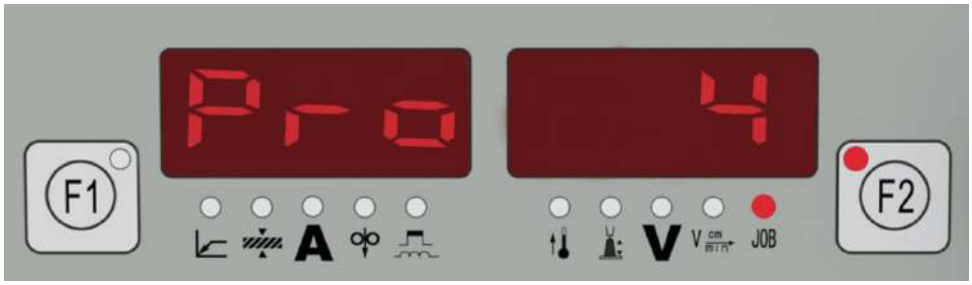

Important! If the selected program location already has a job stored in it, then this existing job will be replaced by the new job.

5.“PrG” appears on the left displayer to indicate that the job is now stored. Release the Store button (5)

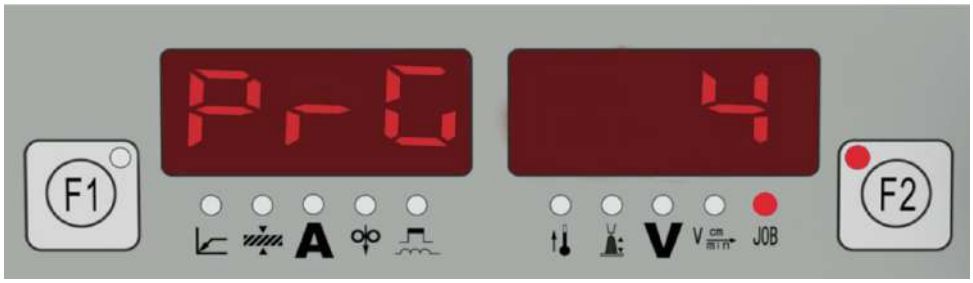

6. Briefly press the Store button (5) to exit from the job menu

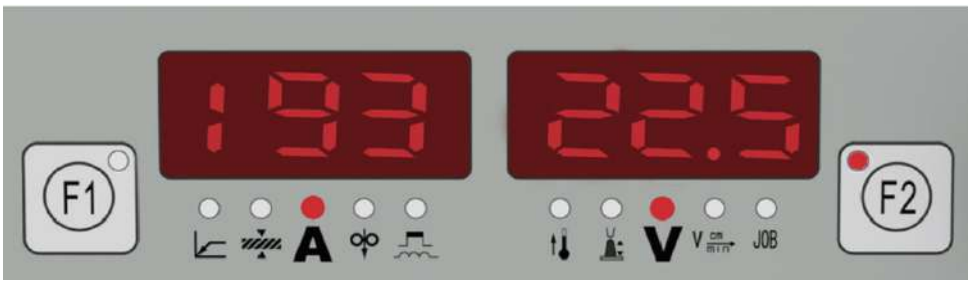

Recall a job

After storage, all jobs can be recalled and used in job mode.

1.With the “C” button (4), indicator (22) is on -the last job used is displayed. To view settings programmed in this job, use the “Parameter selection” buttons (2) and (3). The process and operating mode of the stored job are also displayed.

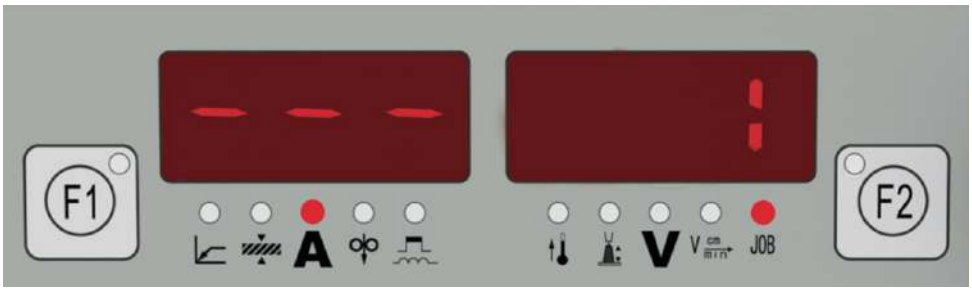

2.With the adjustment knob (1), select the desired job.

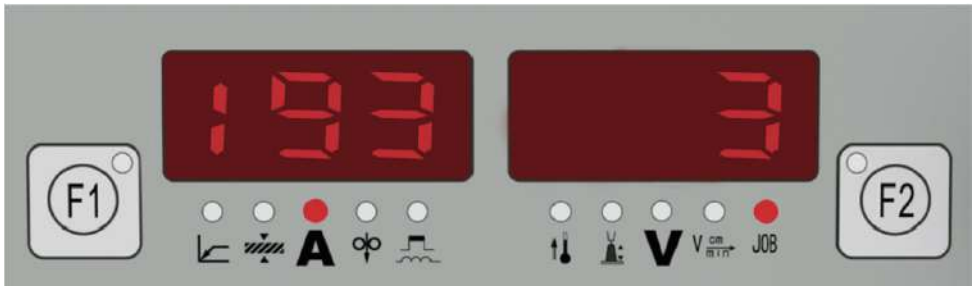

3.Press the “CALL” button (4), indicator (22) is off. Exit from the recall mode.

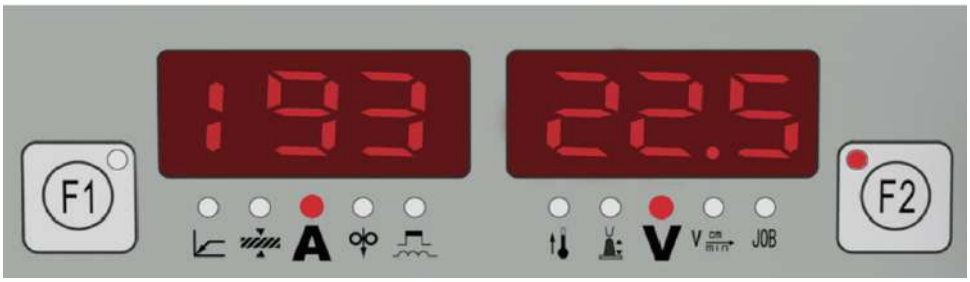

4-6 Interface

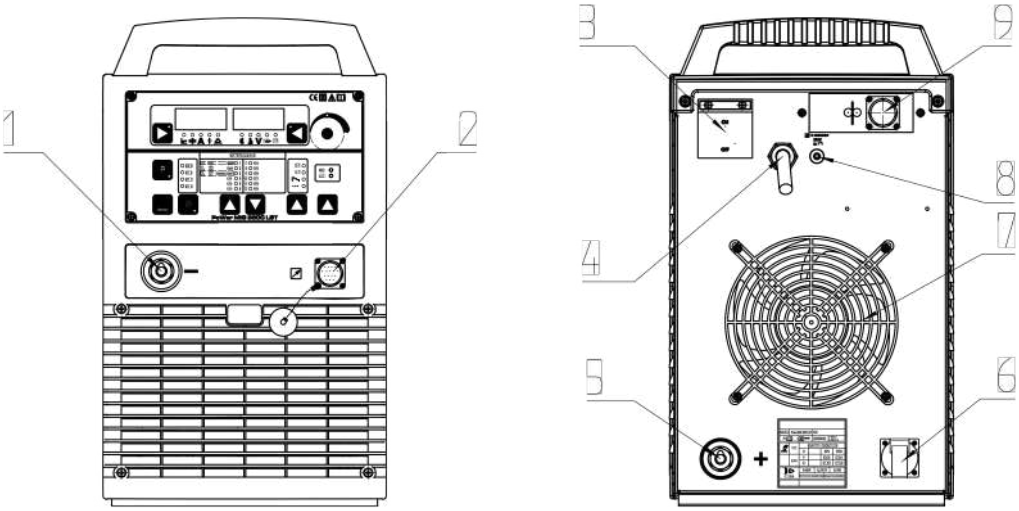

Fig. 4-6-1: interface

1. Quick socket (-)

- Connect ground cable .

2.control socket

Connect voltage feedback cable.

3.Main Circuit breaker

The function of main circuit breaker is to protect welding machine and operator by automatic trip to turn-off power supply when overload or short circuit happens to the power source. Normally, the switch flipped to upward means power-on. To start or stop the welding machine is done by the main breaker in the distribution box. Please do not take this circuit breaker as the power breaker.

4.Power cord

Three-phase four-wire system, yellow-green wire connection ground.

5.Quick socket (+)

connect with weldIng cable.

6.Socket for CO2 gas regulator

AC36V / 5A power supply for the CO2 gas regulator.

7.Fan

8.Over laod protection

Used for overload protection of wire feeder.

9.Wire feeder control socket

For connecting with the control cable of wire feeder.

	PIN NO.	Description
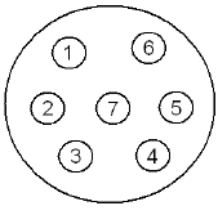	1	Power supply for wire feeder,AC31V
	2	
	3	RS485 communication interface
	4	
	5	
	6	
	7	Arc voltage feedback

Table. 4-6-1: Wire feeder control socket

4-7 Installation

Warning! An electric shock can be fatal. If the machine is plugged into the mains electricity supply during installation, there is high risk of very serious injury and damage. Do not use the functions described here until you have read and completely understood “safety rules” in the beginning. Only carry out work on the machine when

- the mains switch is on turn-off position,
- the machine is unplugged from the mains.

● **Installation of the system components**

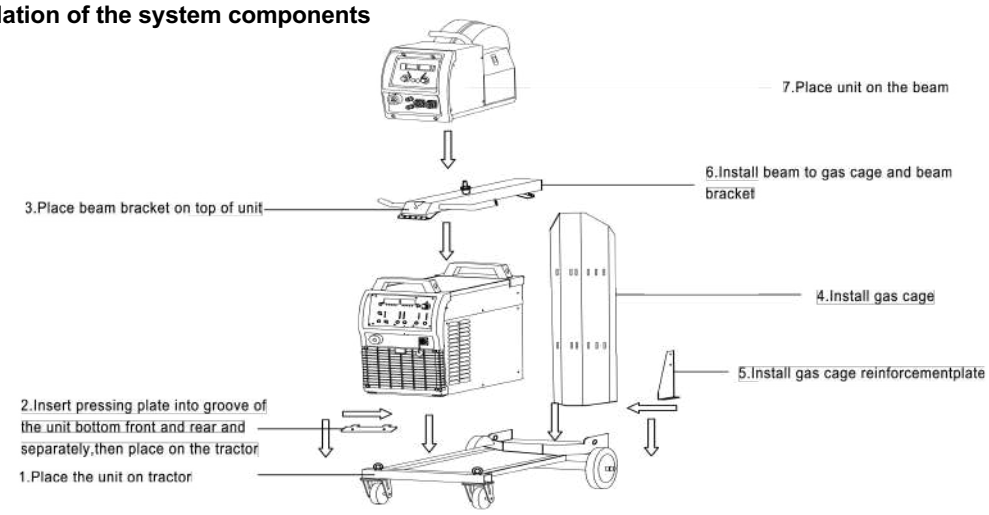

Fig. 4-7-1: Installation of the system components

● **Welding cable components assembly**

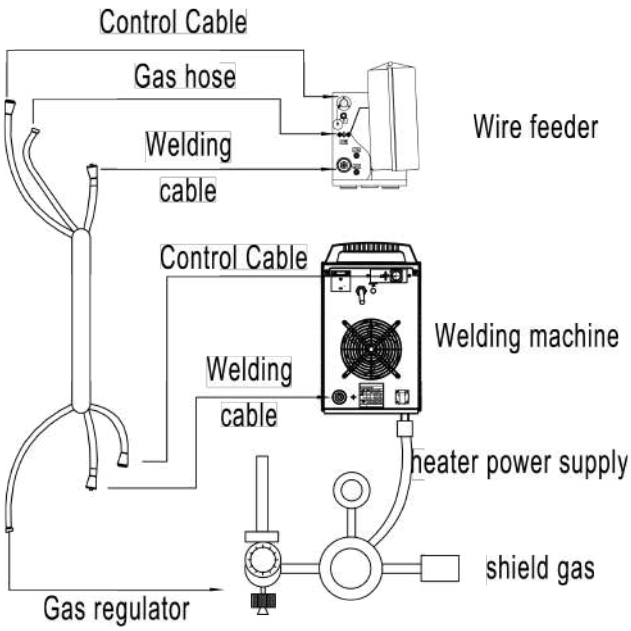

Fig. 4-7-2: Welding cable components assembly

● **Mounting the welding torch**

When welding different materials, the hose in the welding gun is different,-Steel wire hose is suitable for hard wire, such as carbon steel wire, stainless steel wire.

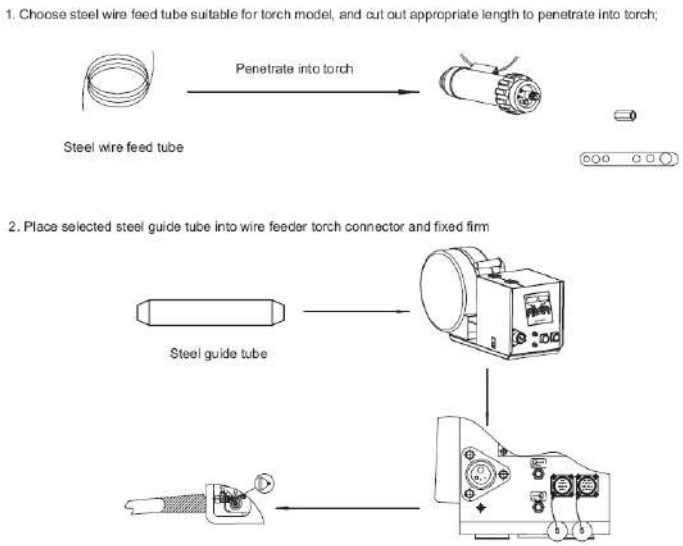

Fig. 4-7-3: Installation for steel wire feed tube

Note! If the wire hose is too tight or too loose, it will increase resistance for wire feeding and cause wire feeding instable.

- **Power supply and cable**

Please note the size of fuse and circuit breaker in the table below are for reference only.

Model		PoWer MIG3500 LST
power supply		3 phase, AC380V/400V/415V±10%, 50/60Hz
Electricity grid min. power (KVA)	Power grid	22
	Generator	30
Input protection(A)	Fuse	30
	Circuit breaker	32
Cable size (mm²)	Power cord	≥2.5
	Output cable	35
	Protective GND wire	≥2.5

Table 4-7-1:power supply and cable requirement

Note! Welding machine must be taken special design if it is powered by generator, please contact with manufacturer if you have such needs.

connections of power cord and distribution box:

Warning!

---Avoid hot-line work.

--- Operating by professional electrician.

--- Avoid connecting two power sources to one breaker.

--- Please refer to Table 4-7-1 to check if standard of input voltage, breaker and power cord is suitable.

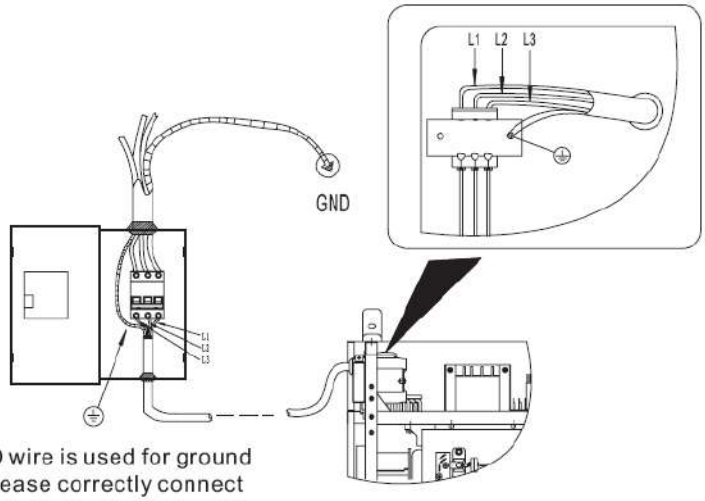

Yellow-green protective GND wire is used for ground connection! Not zero wire! Please correctly connect as shown in the picture or other right manner; cut off power source when connect;
If main case is grounding, this wire do not need to ground;

Fig. 4-7-4: Connections for power cord and distribution box

4-8 MIG/LST welding process

Warning! Operating the equipment incorrectly can cause serious injury and damage. This part is about operating. Do not use the functions until you have read and completely understood content of this manual.

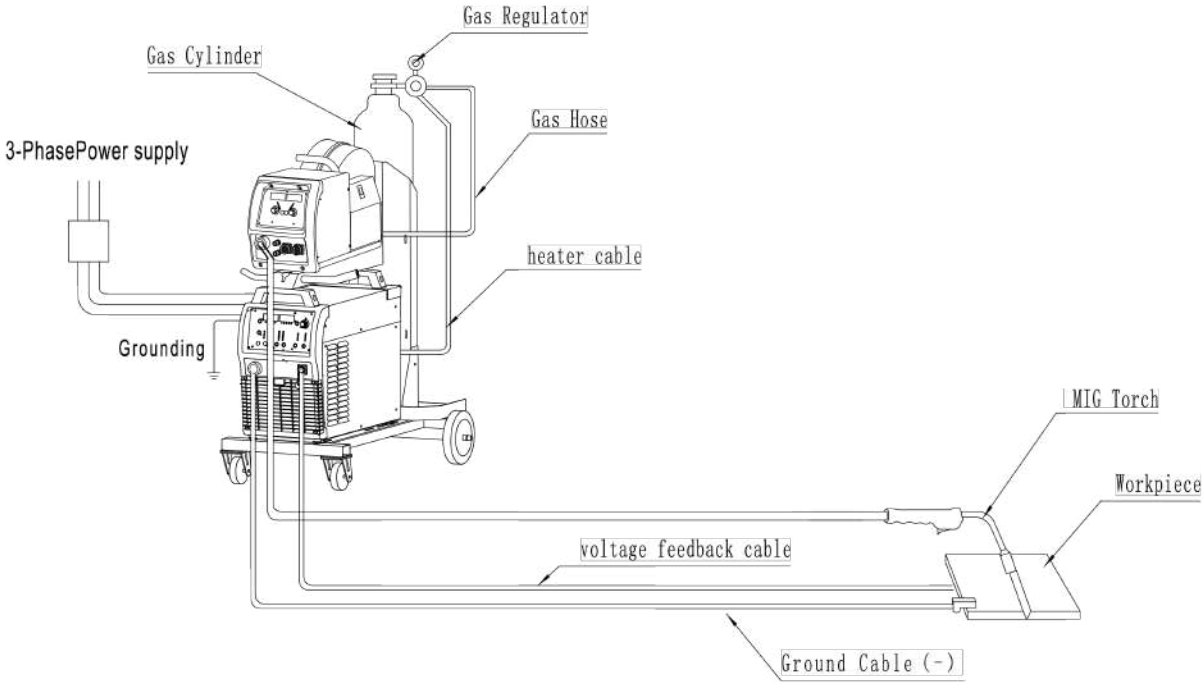

Fig. 4-8-1:MIG/LST Welding

4-9 Technical data

Note! Please use the machine under the allowed power supply voltage range marked in the nameplate.

Model	PoWer MIG3500 LST		
Voltage/Frequency (3 phase)	380V±10%, 50Hz	400V±10%, 50Hz	415V±10%, 50Hz
Rated input capacity (KVA)	14		
Rated input current (A)	26	24.7	24
Range of welding current (A)	60~350		
Range of welding voltage (V)	15~40		
Rated duty cycle (%)	60		
Efficiency (%)	≥89		
Power factor	≥0.87		
Wire size (mm)	Φ0.8~Φ1.2		
CO2 gas flow rate (L/min)	10~25		
Dimension (mm)	630×330×570		
Weight (Kg)	55		
Insulation class	Main transformer/output reactor	H	

Table 4-9-1: PoWer MIG3500 LST technical data

4-10 Dimension

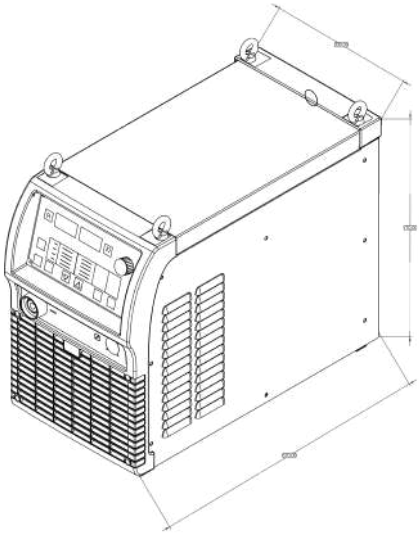

NO.	Item	Unit(mm)	Unit(inches)
1	length	670	26.4
2	Width	330	13
3	Height	572	22.5

Table. 4-10-1: Dimension

4-11 **Disassembly and reassembly**

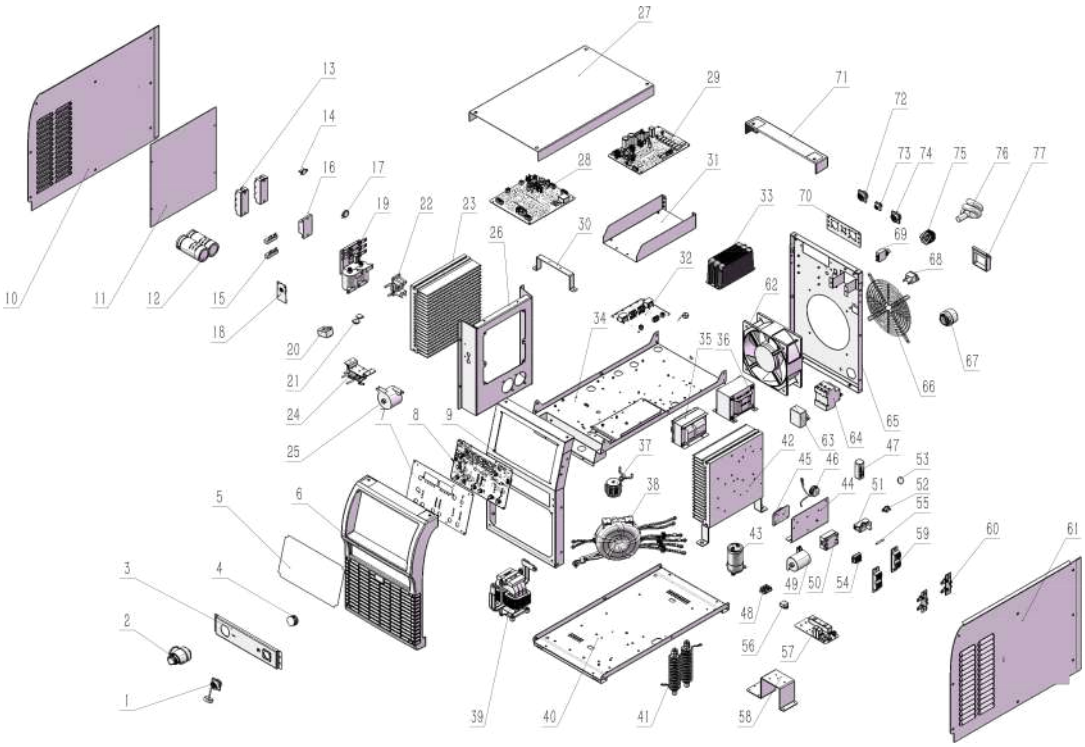

Fig. 4-11-1: Inner structure

NO.	Item	Stock NO.	Qty	remarks
1	Control socket	740001-00045	1	
2	Quick socket	740002-00027	1	
3	Board for fixing quick socket	766003-03421	1	
4	Knob	720031-00137	1	
5	PC sticker	771001-01650	1	
6	Plastic front panel	262005-01040	1	
7	Control panel	262035-00317	1	
8	Display board	220503-00190	1	
9	Front panel	262005-01039	1	
10	Left side panel	262017-00602	1	
11	Ventilation dustproof board	775007-01532	1	

12	Electrolytic capacitor	722004-00101	2	
13	IGBT modlue	735007-00048	2	
14	Temperature relay	745008-00007	1	
15	Ceramic shell oxide film resistor	720002-00010	2	
16	Rectifier module	735005-00002	1	
17	Varistor	720021-00017	1	
18	Current transformer board	220149-00136	1	
19	IGBT capacitor plate	220005-00131	1	
20	Current sensor	753001-00020	1	
21	Porcelain dielectric capacitor| 【CT81+250VAC+22b+0.01μF+X1Y2+P10】	722002-00018	1	
22	Filter inductor components	220479-00002	1	
23	IGBT radiator	264005-00197	1	
24	Current exchange inductor	220281-00037	1	
25	Polypropylene capacitor|【MFD-DA01-500V-4μF】	722001-00073	1	
26	IGBT radiator bracket	766002-01110	1	
27	Top cover	262029-00476	1	
28	Main control board |【MAG-350RL.6.0】	210580-00997	1	
29	Wirefeeder control board	210580-00822	1	For robotics
30	Wirefeeder control box bracket	766002-01197	1	For robotics
31	Wirefeeder control box	766003-02344	1	For robotics
32	Drive board	210310-00118	1	
33	Filter	752004-00017	1	
34	Middle plate	263071-00415	1	
35	Power transformer Ⅰ	220179-01096	1	
36	Power transformer Ⅱ	220179-01097	1	
37	Resonant inductance	220521-00072	1	

38	Main transformer	220629-00284	1	
39	Reactor	763004-00177	1	
40	Bottom plate	261065-00250	1	
41	Round plate resistor	720006-00072	2	
42	Diode radiator	264011-00192	1	
43	Electrolytic capacitor	722004-00138	1	
44	Fuse holder bracket	766002-01213	1	
45	Voltage feedback inductance	220900-00301	1	
46	Drive signal anti-common mode inductance	220401-00031	1	
47	Polypropylene capacitor|【CBB65-450VAC-50μF±5%】	722001-00062	1	
48	Fast recovery diode|【DSEI2×101-06A（IXYS）】	735006-00095	1	
49	Polypropylene capacitor|【MFD-DA01-1400V-20μF】	722001-00070	1	
50	Solid state relay|【JGX-1571F/014-10A 380V-0L】	715004-00003	1	
51	Fuse holder	740007-00004	1	
52	Temperature relay|【KSD301 250V 10A 85℃】	745008-00008	1	
53	Thermistor	720022-00025	1	
54	Fast recovery diode modlue|【DSEI 2×61-10B】	735006-00020	1	
55	Fuse	745007-00011	1	
56	Thyristor|【SG25AA60（SanRex）】	735002-00016	1	For robotics
57	Pilot arc control board	220900-00256	1	For robotics
58	Pilot arc control board bracket	766002-01065	1	For robotics
59	Fast recovery diode modlue|【MMF300Y060DK1】	735006-00029	2	
60	Diode resistance-capacitance absorption board	220455-00002	2	
61	Right side panel	262023-00586	1	
62	Fan	746001-00087	1	
63	Polypropylene capacitor|【CBB15-Y-275V-1.75μF±5%】	722001-00015	1	CCC
64	Main circuit breaker	745011-00022	1	

65	Rear panel	262011-00921	1	
66	Fan protection net	766003-02403	1	
67	Quick socket	740002-00027	1	
68	European socket|【1601】	740004-00039	1	
69	Overcurrent protector	745013-00044	1	
70	Board for fixing control socket	766003-02405	1	
71	Plastic rear decoration	766003-02389	1	
72	Control socket	740001-00047	1	
	Control socket|【WS28K16Z】	740001-00051	1	For robotics
73	Control socket【WS16K7Z】	740001-00145	1	For robotics
74	Control socket|【WS28K20Z】	740001-00116	1	For robotics
75	Cable waterproof clamp|【PG25(Black)】	773002-00011	1	
76	Rubber sheathed cable	769001-00026	1	
77	cover for main breaker	766003-02217	1	

Table 4-11-1: Main components list

Note: This table is for reference only, and the detail of actual product shall prevail.

5-TROUBLE SHOOTING

Warning! An electric shock can be fatal. Before doing any work on the machine:

-Switch it off and unplug it from the mains

-Put up a clearly legible and easy-to-understand warning sign to stop anybody in advertently switching it on Again.

-Check to make sure the electrically charged components (e.g.capacitors) have been discharged.

-Bolts in machine case also work for ground connection. Never use other bolt that can not work for ground connection.

5-1 **Error code**

This series of machines have automatic protection and error code display function. Relevant Cause & Remedy can be found according to below Error codes, as shown in Table 5-1.

Error code	Trouble	Cause	Remedy
E0A	Water shortage protection	1) Not enough or no circulating water in water-cooling system 2) Water flow switch or signal line are faulty	1) No or not enough cooling water 2) Water hose is blocked or no connection 3) Water circulation of torch is blocked 4) Water-cooling motor is faulty 5) Check water flow switch or signal line 6) Replace control board 7) Adjust sub-menu parameter P10 to OFF
E10	Torch trigger abnormal	Press the torch trigger for long time without welding operation	1) Release torch trigger: 2) The error code disappears and torch is normal 3) Always display the error code and the torch is damaged, replace the torch
E15	Abnormal when the mains switch is ON	1) The torch trigger is on closed state when machine is ON 2) Open circuit voltage 3) Current outputs 4) Wire feeding 5) Gas flow	1) Check torch trigger 2) Replace control board 3) Replace drive board
E17	Too large output current	1) Over-current 2) Current sensor fault 3) Signal line is broken 4) Main control board is damaged	1) Check and repair output cable 2) Trouble-shoot the signal line failure 3) Replace current sensor 4) Replace main control board
E18	Abnormal output voltage	1) Voltage feedback wire is broken 2) Main control board is damaged	1) Check voltage feedback wire 2) Replace main control board

E19	Over-heat protection	1) The welding machine is overheat (Duty cycle of power source has been exceeded; The ventilation openings are hindered) 2) Temperature relay fault 3) Signal line is broken 4) Main control board is damaged	1) Check fan and wait for the machine cool down 2) Check the connection of temperature relay 3) Replace temperature relay 4) Replace main control board
E30	Wire feeder overload	1) The welding wire is at the end 2) The wire feed motor is over-current, stuck or damaged	1) Replace wire spool 2) Straighten the torch cable and check if the wire feed hose is twisted or blocked by dust
E40	Communication between the display board and main control board is abnormal	1) Communication cables are loosen or broken 2) Main control board is damaged 3) Display board is damaged	1) Check communication cables 2) Replace main control board 3) Replace display board
E42	Communication between welding machine and wire feeder is abnormal	1) Control cable of wire feeder is not plugged in or broken 2) Communication cables are loosen or broken 3) Wire feeder main control board is damaged 4) Control circuit of welding machine is faulty	1) Check control cable 2) Check communication cables 3) Replace main control board for wire feeder 4) Replace circuit board for welding machine
E80	Communication between welding machine and dEV interface is failed	1) Communication cable between dEV interface is broken 2) dEV interface is faulty	1) Check communication cables or interface 2) Replace interface
E81	Communication between dEV controller and dEV transceiver module is failed	1) dEV controller can't receive the data from dEV transceiver 2) The received data is always at fault	Power-on reset, check module's power supply or replace module
E82	dEV transceiver module initialization failed	dEV transceiver module can't initialize normally	Power-on reset or replace module

E83	dEV transceiver module fault	dEV transceiver module can't operate normally	Check the indicator state of switching board module, take proper measures or replace module.
E84	dEV bus fault	dEV bus can't establish connection successfully	Check the indicator state of switching board module, check if the bus connection, bus power supply, terminal resistance, bus baud rate is correct depending on indicator state
E85	No robot ready signal	Don't apply power to robot or has not finished initialization, that is robot do not give ready signal	Check the robot or replace welding machine main control board
E86	Exceed given range	External equipments (robot, automation welding system) given parameters exceed welding procedure's allowed range	Adjust to suitable range for external equipments (robot, automation welding system)
E87	No corresponding welding procedure	The given procedure channel for robot has no corresponding database, or no stored parameter in store channel which is called	Modify given parameter for robot, switch to the channel which has expert database and stored welding parameters

Table 5-1: Error code display

Important! If any error message that is not described here appears on the displays, then the fault is one that can only be put right by a service technical. Make a note of the error message shown in the display, and the serial number and configuration of the power source, and get in touch with our after-sale service, giving them a detailed description of the error.

5-2 **Trouble shooting**

Note! The flowing troubles and causes are uncertain. However, during the process of MIG Pulse and the normal using conditions, that might happen.

Trouble / Remedy			No arc start	No gas output	No wire feeding	Bad arc start	Unstable arc	Poor welding seam	Wire sticks with work piece	Wire sticks with contact tip	Gas hole
Welding machine	Distribution box (input protection device)	1. Switch is off or trips 2. Fuse is broken 3. Connection part is loose 4. Phase missing	○	○	○						

	Input power supply cable	1. Cable is broken 2. Connection part (input part) is loose	○	○	○						
	Welding machine operation	1. Circuit breaker is off or trips 2. 2A fuse in rear panel of welding machine is broken	○	○	○						
Gas	Gas cylinder and gas regulator	1. Gas valve is closed 2. Gas inside of gas cylinder is not enough 3. Pressure or gas flow rate is not proper 4. Connection part is loose		○			○				○
	Gas feeding hose	1.Connection part is loose 2. Gas hose is broken		○							○
Wire feeder		1. Wire feeding roller, wire feeding hose: improper wire standard 2. Not enough pressure set by pressure handle 3. Wire powder is in wire feeding hose inlet 4. Improper slow wire feeding speed			○	○	○	○		○	
Welding torch	1. Contact tip, nozzle, torch tube is loose 2. Loose connection with wire feeder							○			○
	1. Contact tip, long wire feeding hose: wrong wire standard, worn, unclean or deformation					○	○	○		○	
Welding	1. Cable broken: welding cable, torch		○	○	○		○		○		

torch cable	trigger cable 2. Loose connection with wire feeder or it is damaged									
	1. Cable: overlay or serious curve				○	○	○		○	
Work piece cable	1. Cable standard: not enough sectional area 2. Connection part is loose 3. Work piece is bad electric conduction				○	○	○			
Work piece surface	Surface has oil, paint coating				○	○	○	○		○
Welding condition	1. Wrong welding current, voltage, torch angle, welding speed or wire stick-out length 2. Wrong welding program				○	○	○	○	○	

Table 5-2: Trouble shooting

6-CARE AND MAINTENANCE

Warning! An electric shock can be fatal. Before opening the machine:

- Switch it off and unplug it from the mains
- Put up a clearly legible and easy-to-understand warning sign to stop anybody inadvertently switching it back on again
- Check to make sure the electrically charged components (e.g.capacitors) have been discharged

- **Maintenance of welding power source**

Please follow the instructions as below to ensure normal use of power source

- Conduct safety check at regular intervals (see “Safety rules”)

- Dismantle machine side panels and clean machine inside with clean and low-pressure compressed air by professional technician, not less than twice per year. Clean the components at a certain distance only

- If a lot of dust has accumulated, clean the cooling-air ducts

- **Maintenance of welding torch**

- Torch nozzle may stain with some grain because of welding splash, long time use will influence protective gas flow and welding, so clean in time.

- Welding contact tip is consumable, in order to ensure good welding result, replace every day before welding.

- Inwall of torch wire feeding hose may stain impurity after long time using, if not clean, will influence wire feeding smoothness and welding quality. Generally, after finishing using a reel of wire, use high pressure gas to clean wire feeding system. If wire feeding resistance is still high, change wire feeding hose.

For water cooled welding torch:

- Check the connections of water cooling system
- Check the coolant level, cleanliness of coolant etc. (clean coolant only)
- Frequently check coolant's back flow state

- **Maintenance of wire feeder**

- Avoid water and other strong corrosion liquid, wipe in time if contacts, keep clean of wire feeder.

- As gearing equipment, wire feeder should keep lubrication and clean of rotate part, add lubricant usually.

- Replace worn wire feeding rollers because of long time use which will influence wire feeding stability.

- Clean wire feeding system frequently to avoid wire feeding resistance increasing, and influencing wire feeding stability and welding quality.

- **Daily maintenance**

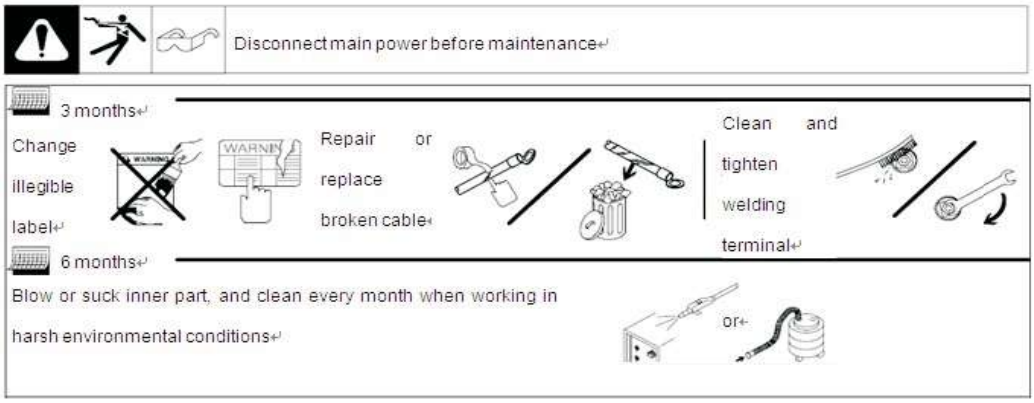

Fig. 6-1: Daily maintenance